LITERATURE NO.: RGEC-2020-217

Quick Release Hook Technical Literature

JIANGSU RONGGANG EQUIPMENT CO.,LTD

2020-06-04

M: 0086-18852550332 Email: sales3@rgecchina.com Website: www.fenderschina.com

Content

1. Foreword and Scope of Supply

Quick release hook

Quick Release Hook is a special equipment installed on the wharf for ship mooring, which is an alternative to the traditional mooring bollard.Compared with bollard, the quick release hook not only reduces labor intensity and improves labor efficiency, but also guarantees the safety, reliability and durability of the wharf.

Main Features:

(1) Each hook body can be quickly decoupled under rated load;

(2) The operating force of the hook is less than 20kg at full load.

(3) The hook head is designed in a balanced way, and the reset of the hook head and the releasing part can be completed with only one action.

(4) Hook can meet the horizontal line inclination less than 45° load;

(5) Design according to hazardous area and non-hazardous area;

(6)A sparkless,electrostatic insulation design is used for release hooks in hazardous areas.

1.1 Technical Parameters

1.1.1 Rated tensile forces of single hook 350kN, 500kN, 600kN, 750kN, 1000kN, 1250kN, 1500kN

1.1.2 Manual operation force <150N

1.1.3 Hook horizontal Angle 45° (inside) -90°(outside)

1.1.4 Hook vertical Angle +45°

1.1.5 Traction of electric winch, mooring speed and motor power

Rated Pull Force(kN)	Initial Pull Force(kN)	Capstan Speed (m/min)				
		10	15	20	25	30
10	20	2.2kW	3kW	4kW	4kW	5.5kW
15	30	3kW	4kW	5.5kW	7.5kW	7.5kW
20	40	4kW	5.5kW	7.5kW	11kW	11kW
25	50	5.5kW	7.5kW	11kW	11kW	15kW
30	60	5.5kW	7.5kW	11kW	15kW	18.5kW
40	80	7.5kW	11kW	15kW	18.5kW	22kW
50	100	11kW	15kW	22kW	22kW	30kW

M: 0086-18852550332 Email: sales3@rgecchina.com Website: www.fenderschina.com

Double Hooks

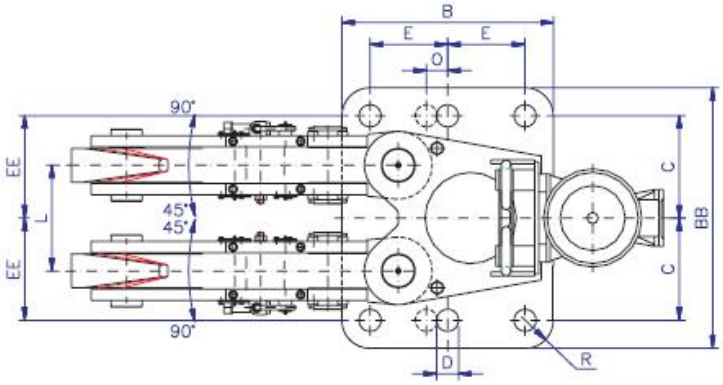

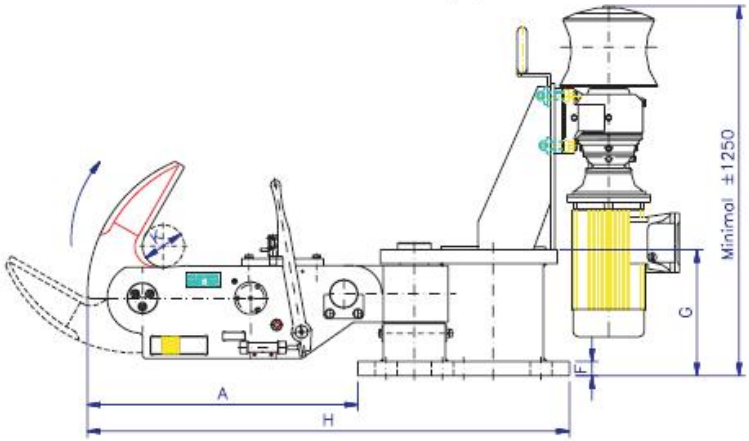

Spectification	Single Hook Work Force (KN)	Running Pull of Electrical Capstan (KN)	Weight (kg)	A	B	BB	C	D	E	EE	F	G	H	K	R	X
QRH-2-40	400	10	491	583	650	700	260	54	235	260	35	370	1233	96	90	6×M48
QRH-2-60	600	10	878	788	750	780	290	62	275	290	45	407	1536	130	100	6×M56
QRH-2-75	750	10	1049	888	750	850	325	70	275	325	45	417	1638	130	100	6×M64
QRH-2-100	1000	20	1439	959	750	925	363	78	275	363	50	447	1709	150	100	6×M72
QRH-2-125	1250	20	1602	1030	750	925	363	86	275	363	55	479	1780	150	100	6×M80
QRH-2-150	1500	20	2332	1210	750	1000	400	86	275	400	55	499	1960	150	100	7×M80

1.1.6 Hauling speed of electric capstan is shown in the above table.

1.1.7 Motor explosive-proof grade Exd II BT4, Protection Grade IP55, Insulation class: Class F.

1.1.8 Power supply: Three-Phase AC 380V, 50Hz.

1.1.9 The reducer is directly connected with the motor.

1.1.10 Power supply: 3 Phase AC 380V, 50Hz (It can be adjusted according to the on-site situation).

1.1.11 See the general assembly drawings of different types of quick release cable hooks for outline dimensions.

1.2 Scope of Supply

NO	Item	Specification	Material	Unit	Quantity	Remark
1	Double Hook Quick Release Hook	2*150T		Units	12	Include capstan and the monitoring system

2.Standards and Specifications

GB50160	《 Fire Protection Code for Design of Petrochemical Enterprises》
JTJ237	《Fire Protection Design Specification for Oil Terminals》
GB3836.1	《 General Requirements for Explosion-proof Electric For Explosive Environment》
JTJ230	《Technical Provisions for Anti-Corrosion Of Steel Structures in Port Engineering》
GB11352	《Cast Carbon Steel For Engineering Use》
GBJ17	《Steel Structure Design Specification》
GB4224	《Raw Materials for Steel Making》
GB3323	《 Radiography and Quality Classification of Steel Fusion Welded Butt Joint》
GB1764	《Determination of Film Thickness》
GB8923	《Corrosion Grade and Derusting Grade of Steel Surface before Coating》
JTJ244	《 Standard for Quality Inspection and Assessment of Port Equipment Installation Engineering》
JB/ZQ4000.2	《General Technical Requirements for Machined Parts》
JB/ZQ4000.3	《General Technical Requirements for Welding Parts》
JB/ZQ4000.5	《General Technical Requirements for Casting》
JB/ZQ4000.7	《 General Technical Requirements for Forgings》

Main Standards

a. OCMIF: Mooring Equipment Guidelines

b. ASME, Section IX:Welding Qualifications

c. ASTM A283 (Grade C):Standard Specification for Low and Intermediate Tensile Strength Carbon Steel Plates.

d. ASTM A148: Standard Specification for Steel Castings, High Strength for Non

Structural Purposes.

e. ASTM A572:Standard Specification for High Strength Low Alloy

Columbium-Vanadium Structural Steel.

f. IEC: National Electrical Code, Intrinsically Safe Process Control Equipment for Use in Class I Hazardous Locations International Electro technical Commission

Adopt the latest version of the above standards.

3.General Requirement

3.1 Quick release hook can lock and safely release the hook from no load to full load.The manual release force of the cable hook under full load is less than 150N.

3.2 The hook can be operated independently and rotated in a certain Angle along the horizontal and vertical planes.

3.3 The hook is optimized by FEA analysis and calculation method. The overall structure of the hook is compact and reasonable, and the operation is flexible and convenient, thus reducing the occupied space of the dock.The hook can be automatically reset.Gently stir the lever to release the cable.The hook release mechanism is arranged in the structure of the hook body, which can prevent the neighboring hook from causing damage to the hook so that the rope can not be fastened.In order to prevent accidental operation of the hook when the cable is taken off, the release lever of the manually operated hook is designed as a movable dial lever.

3.4 The hook is suspended on the dock floor and will not touch or hit the dock floor under any safety load.

3.5 The hook material is cast by ZG35CrMo high quality alloy steel, which meets the requirements of national standard JB/T6402 for low alloy and high strength cast steel, and has been tempered to improve its mechanical properties.

3.6 The hook frame is equipped with an engineering plastic alloy buffer block, which is used to absorb the energy generated when the hook is taken off under high load, protect the hook structure, and effectively prevent the spark generated by the impact between metals when the hook is taken off.

3.7 Each hook can be disassembled and assembled with standard manual tools.Easy to use, maintain and install.

3.8 The hook frame is made of Q345B steel plate, which conforms to the national standard GB/T1591 low alloy and high strength structural steel, and is machined after welding and stress relief annealing treatment with special tooling.

3.9 The hook locking mechanism self-locks, and the cable will not slip from the hook within the strength of the hook locking mechanism.

3.10 The pin shaft is made of 40Cr high quality low alloy steel, and the surface is plated with hard chrome after grinding.

The shaft hole is embedded with high strength steel-plastic composite bearing, with small friction coefficient (μ=0.04 ~ 0.1), abrasion resistance, good corrosion resistance, bearing capacity (bearing capacity of 500N/mm^2).There is a spiral oil groove on the surface of the pin shaft, which makes it convenient to add butter and thoroughly lubricated. The steel-plastic composite bearing is matched with the surface of the chrome-plated pin shaft, which will never rust and die under normal conditions.The shaft end support is provided with a sealing ring.

3.11 Support structure and foundation

3.11.1 The force on the hook during operation is transferred to the concrete wharf foundation through the bolts on the pedestal bottom.

3.11.2 The hook support adopts Q345B steel plate welding structure.

4. Cable-winding mechanism

4.1 The cable-winding mechanism is mainly composed of motor (with electromagnetic brake), reducer, capstan head and electric control box.The capstan is connected with the fastening support of the quick-release cable hook.

4.2 The electric capstan can operate in a positive and reverse manner.The operation of the capstan is operated by an inlet foot switch and a forward and reverse selector switch mounted on the electric control box.The capstan steering is controlled by the forward and reverse selector switches on the electric control box, and the capstan starting and braking are controlled by the foot switch.

4.3 Explosion-proof motors explosion-proof grade Exd II BT4; Protection grade IP55; Insulation class is Class F.

4.4 Gear reducer Considering the special situation of the force on the output shaft of the gear reducer, we choose the gear reducer that can bear certain axial force to meet the needs of mooring rope.The reducer is directly sealed and connected with the motor, with good waterproof and dustproof performance. The capstan and support are designed to be waterproof and maintenance-free.

4.5 Motor explosion-proof motor, is normally closed, that is, lost power brake, in case of spring.

4.6 The capstan head is made of ZG230-450 castings, and the warping part is cast with anti-skid rib friction edge.

4.7 The motor is a specially customized and reused-explosion-proof three-phase squirrel cage induction motor. The working system is S3, which shortens the overall size and reduces the overall height of the fast cable hook 100-200mm under the condition of ensuring the use and safety, and there is no need to set up an operating table, so as to make the operation more convenient and easy.The heater is equipped with moisture proof inside and the starter is equipped with overheating protection.

5.Electric Control Equipment

5.1 Power supply: THREE-PHASE ALTERNATING Current, AC 380V, 50Hz.

5.2 Circuit Protection: Motor Starter Overheating Protection.

5.3 Foot Switch: Imported foot switch has strong anti-corrosion and oxidation effect, with safety plate, protection grade IP65.

5.4 Cable and cable sheath: All cable sheath is of Metal Structure, reaching IP66 insurance

grade. All internal cables are steel armored.

5.5 Water-proof and Dust-proof Grade: Motor control equipment, Motor Starter is IP66 grade, foot switch is IP65 grade.

5.6 Explosion-proof grade: ExdIIBT4.

6. Surface Treatment and Coating

6.1 After the steel structure is made, surface shot blasting and spray painting (220 m) shall be carried out.

6.2 Heavy anticorrosive paint shall be used for coatings with a service life of more than 15 years.

Primer: epoxy zinc rich primer;

Intermediate paint: epoxy mastic intermediate paint;

Finish: Polyurethane finish.

6.3 Number of paint layers and dry film thickness:

2 primer, dry film thickness 80 (40×2)μm;

Intermediate paint, dry film thickness 70μm;

Second coat, dry film thickness 80 (40×2)μm;

The total thickness of paint coating is not less than 220μm.

6.4 Paint color: Specified by the user.

6.5 Paint brand: imported Jordan brand or designated by the user.

7. Testing and Certificates

7.1 Each hook shall undergo tensile test of 125% rated load before delivery.

7.2 Each set of Quick Release Hook device shall be carried out cable release test under rated load before delivery.

7.3 No-load, rated load and 110% rated load test shall be carried out for each set of capstan before delivery.

7.4 After each set of Quick Release Hook device is installed on the buyer's wharf, no-load running test and actual ship mooring and mooring test shall be carried out.

7.5 Factory test report and certificate of qualification shall be provided for each set of Quick Release Hook device.The main accessories, such as motor, reducer, brake, electric control box, etc. are provided with the supplier's operating instructions and qualification certificates.Material certificate and heat treatment report should be provided for main parts, and flaw detection report should be provided for main welds.

8. Installtion Condition

8.1 Power supply conditions: Three-phase 380V, 50Hz.

8.2 On-site cable wiring: Cables connected to the starter box are 5 cores (3 cores are power cables, 1 core is center line and 1 core is ground wire).

8.3 On-site installation work scope: the electric motor, electric starter and foot switch have been connected internally during supply, and the field wiring only connects the cables to the electric control box (they have been assembled during supply, inspected and used at any time).

9. Device Description

Quick Release Hook is a new type of wharf belt cable, cable release equipment. It solves the problem of large labor intensity of traditional cable and cable removal at the dock, reduces the cable and cable removal time and improves the utilization efficiency of the dock. In addition, it can also realize the automatic realization of the cable removal operation and remote control of cable removal. Especially when the terminal or the ship has an emergency, the device can ensure that the ship quickly escapes from the port, thereby protecting the safety of the ship and the terminal.

The Quick Release Hook is mainly composed of a cable-winding mechanism, a locking mechanism and a release mechanism, a cable hook, a hook frame, a control box, a foot switch and a base. The cable-winding mechanism twists a thin lead rope, draws the ship's mooring

rope (thicker) near the mooring hook, hangs the mooring rope on the mooring hook, and completes the work of pulling a mooring rope. When you need to disconnect the cable, you only need to toggle the release lever, the locking mechanism is opened, the hook is turned under the pulling of the cable, and the cable is disconnected from the cable hook, which is fast and convenient.

9.1 Mechanical part technical description

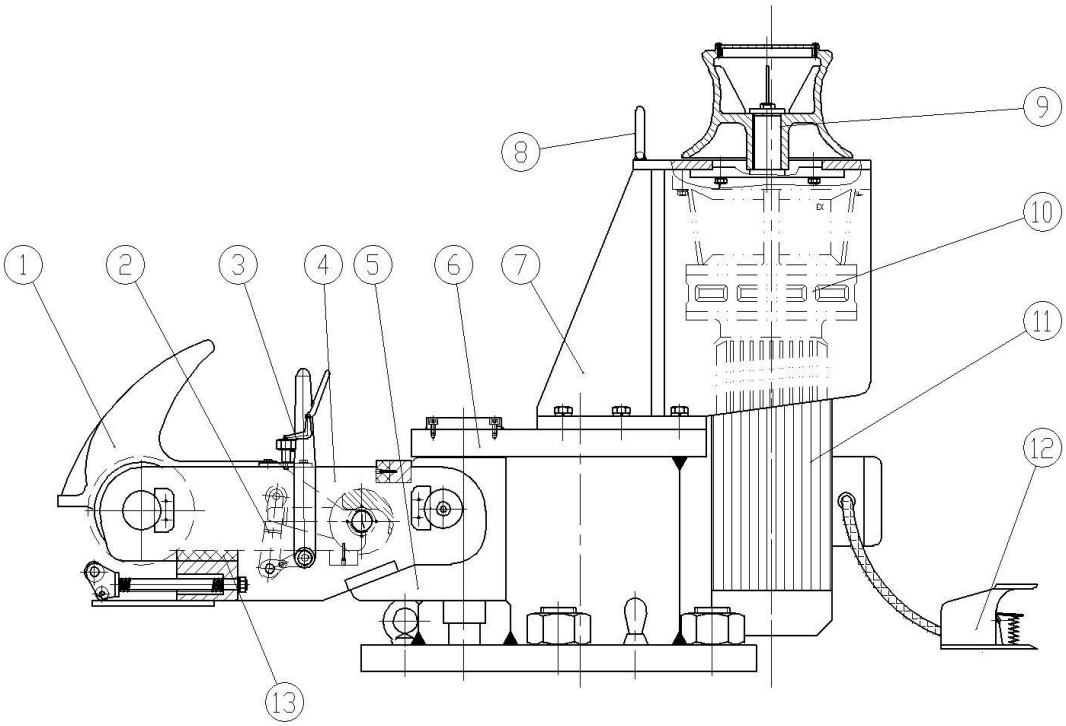

Figure1

1. Hook body 2. Hook body locking mechanism 3. Hook body release mechanism

4. Support frame 5. Connecting shaft body

6. Base 7. Motor support Frame 8. Winch Frame 9. Capstan 10. Reducer

11. Explosion-proof brake motor 12. Foot control switch 13. Cushion pad

As shown in the figure above, the description of each part of the cable release hook is as follows:

(1). Hook body:

The hook body is the key part of the decoupling hook. The hook body is made of ZG35CrMo cast steel. It is mainly used to pull the cable to prevent the cable from falling off and withstand the huge tension of the cable. After strict 3D modeling in the design process, the finite element FEA is applied (Finite Element Analysis) analysis method performs preliminary stress analysis and theoretical tension analysis to ensure that the hook body is theoretically strong enough. After assembly, a 1.25 times rated tensile test is required to ensure strength and safety requirements. At the same time, the use of ergonomic design principles makes the overall structure compact and reasonable, flexible operation, labor-saving and pleasant.

(2). Hook body locking mechanism:

The locking mechanism is a secondary locking mechanism that makes the cable release hook in a self-locking state. It is mainly composed of a lever beam (made of 35CrMo high-quality alloy steel) and a locking roller mechanism (stainless steel welded parts). In the locked position, the hook's The tail is inserted into the groove of the lever beam, the front of the lever beam is inserted into the locking roller, the torque generated by the cable tension is balanced by the pressure on the locking tongue, the torque generated by the lever beam under pressure is balanced by the pressure of the roller, and the torque generated by the roller Balanced by the reset spring, it will not be automatically disengaged when it is in the mechanical self-locking state. This design ensures that the cable will not be disconnected under the rated load; after the manual disconnection, the locking mechanism can be quickly reset.

(3). Hook body release mechanism

Toggle the joystick, the cam block rotates and pushes the roller frame, and the roller is released from the locked position; the lever beam is quickly flipped under the tension of the spring and released from the locked position; the cable hook is turned over, and the cable is disconnected from the cable hook. Since the decoupling mechanical device is arranged inside the hook body, it can prevent accidental disconnection caused by misoperation, and can also prevent the adjacent hook body from damaging it and causing mechanism damage.

(4). Support frame

The support frame is made of Q345B (16Mn) thick steel plate by welding, heat treatment, and gold processing. It is the main load-bearing component on the cable hook. The entire hook body and accessories are installed on the support frame. The pulling force from the cable is transmitted to the base. The support frame is welded on the welding tool of the support frame. After flaw detection and annealing treatment, the inner hole and end surface of the pin shaft are finely bored and the threaded hole is drilled and tapped.

(5). Connection sleeve

The connecting sleeve (material ZG35CrMo) connects the front half of the disconnecting hook with the base part through the connecting shaft installed in the horizontal and vertical directions. The connecting shaft allows the hook body to rotate within a certain range in the horizontal and vertical directions . High-strength steel-plastic composite bearings are embedded in the shaft holes to ensure the characteristics of wear resistance, corrosion resistance and large bearing capacity.

(6). Base

The base is the main connecting part between the decoupling hook and the foundation. It is connected to the pre-buried anchor bolts on the foundation through the bolt holes on the base plate to transmit the traction from the cable. Welding, annealing and machining processes are carried out on special tooling. Weld flaw detection on the base to check the welding quality before the welding is finished.

(7). Motor support Frame

The base is equipped with a motor support frame, and the support frame body is equipped with a winch, a reducer and an explosion-proof motor with a brake. In order to facilitate maintenance, we connect the motor support frame to the base with high-strength bolts.

(8). Winch Frame

The winch frame is a guide ring connected to the support frame to guide the thin cable to the winch, prevent excessive deflection of the guide cable, and ensure the normal work of the winch. In order to prevent the corrosion of the rope frame due to abrasion during the rope

twisting process, we use the stainless steel rope frame.

(9). Capstan

The capstan is a drum with friction edges around it. We have absorbed the advantages of similar products at home and abroad. Its shape has been strictly designed to make the distribution of friction edges reasonable. First of all, make the lead rope not slip when winding on the winch, so that the lead rope is reliable, and secondly, the special design of a certain slope of the winch prevents the lead rope from winding on the winch. Performance, overcome the shortcomings of similar products in use. The capstan can realize forward and reverse rotation and brake immediately after power off. Rotate the direction switch and step on the foot switch (inductive proximity switch) to realize the forward and reverse rotation of the winch. Release the foot switch The electromagnetic brake is powered off at the same time to realize automatic and rapid braking of the capstan. In addition, you can use the manual forward and reverse switches on the panel to operate without the foot switch. We design the motor control system as an anti-lock brake system, that is, the motor is released before the power is turned on, and the motor is delayed to lose power after the power failure. This effectively guarantees the safe use of the system.

(10). Reducer

The reducer is a key component on the decoupling hook. It has the advantages of compact structure, small size and light weight. It has the following advantages: parallel output, saving space; smooth operation, low noise, high efficiency, large output torque, smooth starting; transmission efficiency can reach 97%; gears have extremely high durability, maintenance-free, and long service life.

(11). Motor

The motor adopts electromagnetic brake three-phase asynchronous motor, which has large overload capacity and high mechanical strength. The motor is equipped with a spring-loaded electromagnetic safety brake (power release, power off brake).

Motor specifications:

The rated voltage of the motor is 380V and the rated frequency is 50Hz.

Explosion-proof grade: ExdIIBT4, protection grade: IP55, insulation grade: ClassF.

The motor and reducer of the cable release hook are specially customized by the manufacturer, which shortens the overall height by 100-200mm, without the need to add an operation table, making the on-site operation convenient.

(12). Foot switch

The imported foot switch is a motor switch, so that the operator can start and stop the motor while pulling the thin cable when leading the cable, so that the operation is coordinated and consistent.

(13). Cushion Pad

The cushion Pad is made of engineering plastic alloy, which can reduce the violent impact of the hook body on the frame when the cable hook is detached, so as to prevent the collision between the metals to generate sparks and explode. Effectively ensure the safety of operation and equipment.

Before leaving the factory, each unhook device is subjected to a tensile test on a 2500kN tensile testing machine, and the strength of the hook is checked one by one and the uncabled test is performed under each pulling force to ensure that each product is qualified.

9.2 Technical description of the control part

The control methods of our company's quick cable release hooks include manual cable removal and electric cable removal.

Manual cable release: the operator needs to use a special release lever (operating force <150N) to achieve cable release.

Electric uncable: Electric uncable is to add a set of mechanical devices to the original manual uncable equipment to realize uncable.

Automatic cable release: automatic cable release is to add a remote control system to the original electric cable release equipment. The operator can use the remote control (remote) (optional) to control the action of the hydraulic cylinder according to the tension of the cable.

Remote control (remote) automatically disconnects the cable.

At the same time, it can also be equipped with an imported cable load monitoring system that can display the peak load during mooring and the required mooring load at the specified time; record the value of the cable tension change; and can sound and light alarm.

Cable load monitoring system

The system can monitor the working status of all anchors, and at the same time accurately determine the tension of the cable during mooring and display it on the control panel. It collects data through the stress-sensing pin placed on the shaft of the cable release hook, and alarms the high load of the cable through data processing to ensure the safety and reliability of the cable release hook.

The system has the following characteristics:

◆Receive data through the control unit, display and store it in the computer, at the same time remotely control the off-hook according to the reception, and have a sound and light alarm function.

◆Realize information storage and query at any time.

◆With fault self-diagnosis function, it can determine whether the system is faulty through different flashing of indicator lights.

◆The system is designed according to zone 1 explosion-proof area, and the protection grade is IP66.

The control panel of the manual unwinding winch motor is shown below:

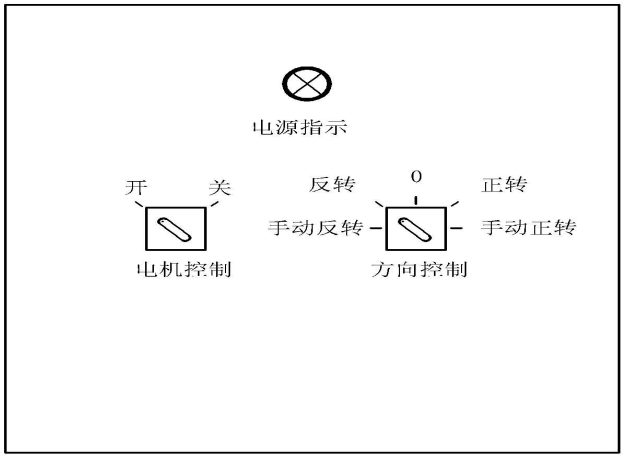

Figure 2

9.3 Description of automatic reset mechanism

As shown in the figure, when the cable tension is greater than 40kN, when unhooking, the hook hits the buffer wheel (material: engineering plastic alloy), and the buffer wheel drives the small wheel (material: brass) to the right to compress the spring , The spring rebounds to reset the hook. If manual reset is used, the operating force is not greater than 100N.

1. hook 2. buffer wheel 3. spring 4. guide base

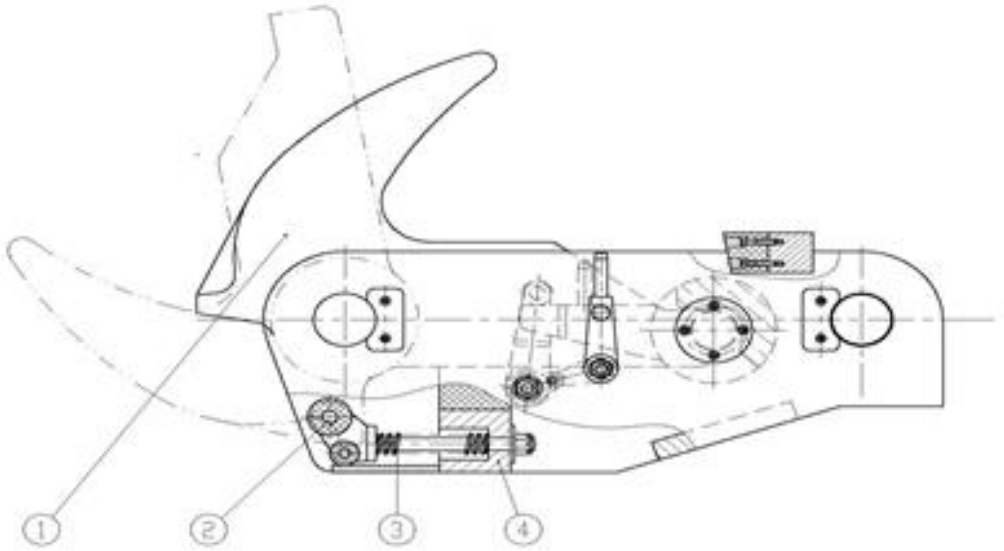

10. Material and Processing Technology for Main parts of the product

NO	Item	Specification	Quantity (PC)	Material	Remarks
1	Quick Release Hook				
1.1	Electrical QRH-Double Hook 150 Ton	QRH-2-150	12		
	Hook Body		2	Low alloy 35CrMo Casting Steel	Equal to ASTM A 536 65-45-12
	Hook body locking mechanism		2	Low alloy 35CrMo Casting Steel	Equal to ASTM A 536 65-45-12

	Hook body release mechanism		2	Stainless Steel	
	Connecting shaft		2	ZG270-500	
	Base		1	Q345B（16Mn）	
	Motor Support Frame		1	Q345B（16Mn）	
	Winch Frame		1	SS304	
	Capstan		1	ZG230～450	
2	Local control system for off-hook		12		
	Explosion-proof brake motor		12		
	Reducer		12		
	Foot Switch		12		
	Cushion Pad		24	Engineering Plastic Alloy	
	Explosion-proof local control box		12	Control motor, foot switch, stress pin, electric decoupling, etc.	
3	Stress monitoring system		12		
	1500kN Stress pin		24		
	Signal amplifier (transmitter)		12		
	Analog input module		12		
	On-site sound and light alarm		12		
	Opening and closing monitoring system		12		
4	Remote off-line system		12		
	Electric off-line actuator		24		
	Protective cover for electric decoupling mechanism		12		
5	Remote centralized control system		1		
	Centralized control platform		1		
	Control room operation terminal		1		
	Software system		1		
	Internal communication cables, connectors, modules and related accessories of		1		

	the device body				

11. Quality Assurance and Control System

Our company strictly organizes the design, development, production, installation and service according to the ISO9001 quality management system. The entire system covers the entire process from design and development to product delivery to after-sales service.

From the beginning of the company's establishment, it has established the quality policy of "providing customers with zero defects and competitive products and services in a timely manner" and the quality goal of "guaranteeing that the product's factory pass rate is 100% and the customer complaint rate is less than 0.5%. According to the quality policy, objectives and the quality system established by the ISO9001 quality assurance standard, during the implementation process, the system implements unified management, leadership attention, full participation, layered implementation, and step-by-step implementation, so that all processes and departments are always in place Controlled state.

At the same time, in order to adapt to the international trend, the company has made its products go to the world as soon as possible, and increased the market share of the products and the influence at home and abroad. The company has also increased investment in many aspects such as manpower, material resources, and financial resources.

Advanced technology, perfect quality inspection methods and effective quality assurance system ensure that the products meet the specified requirements.

1. Before the contract is signed, the company's marketing department, technical department and relevant departments will conduct a contract review of the technical requirements and business requirements of the contract, and review the user's specific requirements and site conditions through the "user questionnaire" to ensure that users are met. And contract requirements.

2. In the design control stage, a project responsibility system is implemented, and a design team is set up by relevant professionals. Each new product development is designed and planned-product design project-product specifications, standards-product design-(each Stage) Design review-design verification-design confirmation-design changes and product improvement throughout the process. In the design review, special attention is paid to: design scheme;

technical key; reliability; functionality; design parameters of key parts and important parts; process plan; special process and special process process measures to ensure that the product design meets the requirements of the contract and standards.

3. Strengthen process control. In the manufacturing process, the company mainly strengthens the quality control of the process, and has set up quality control points for special processes and key processes, focusing on controlling the 5M1E factors: namely, man, machine, material, method, environment, and inspection.

a) Personnel: Production personnel and related professional personnel shall fully implement quality education and on-the-job training to improve their operational skills. Verifiers and special process operators must be evaluated and their qualifications confirmed before they can be employed.

b) Machine: all kinds of equipment are operating normally, regular maintenance and accuracy verification are carried out, so that the process capability can meet the processing requirements.

c) Materials: In order to strengthen the procurement quality and purchase quality control, our company has formulated "procurement quality control procedures", "purchase inspection and test control procedures", "subcontractor assessment procedures" and related related products in the quality system documents According to the standard, the buyer strictly formulates the procurement plan according to the procurement documents issued by the technical department, and purchases at the qualified sub-supplier. The company's quality management department has dedicated personnel responsible for raw materials, outsourcing parts, outsourcing parts, and factory inspection and test acceptance to ensure that unqualified products are not put into production.

d) Method: grasp the integrity of three types of technical documents of the enterprise: namely, the integrity of design documents; the integrity of technological documents; and the integrity of inspection documents. Second, grasp the documents used on the production site must be valid, to prevent the use of invalid documents in the production site, and strict process discipline.

e) Ring: carry out fixed management on the production site, and arrange various materials and products in order to make the site tidy, tidy and smooth.

f) Inspection: control process documents, require reasonable setting of quality control points, and provide necessary inspection resources to ensure that unexamined products will not be transferred to the next process. Regular calibration of measuring instruments and testing equipment, with valid qualification certificates. And adhere to the inspection system of self-inspection, patrol inspection and completion inspection in the production process, and identify, isolate and review the unqualified products in the process to ensure that the unqualified products are not transferred to the next process. A perfect quality management organization network and a three-level inspection system are the prerequisites to ensure that the company's products are 100% qualified for delivery.

4. The company attaches great importance to the effectiveness of the quality system operation, and has established a special quality management agency and quality system specialists to formulate corrective and preventive measures for the unqualifications that occur during the operation of the system, and carry out the "four checks must be" activity, requiring reasons , Check problems, check responsibilities, check losses, set measures to avoid repeated occurrence of unqualified. Adhere to quality assessment and conduct internal quality audit and management review of the quality management system every six months, and improve the supervision mechanism to ensure the effectiveness of the quality management system operation.

5. The company has a special service organization with high-tech and good-quality service personnel, which has a fast response speed to the needs of users. It is responsible for providing users with guidance on installation and commissioning of facilities and equipment and the content specified in the contract. Operators and equipment management personnel conduct operation, maintenance, repair and other training, and establish user files, regularly return visits to users, continuously strengthen and improve after-sales service, high-quality products and high-quality services have enabled enterprises to maintain great competition Advantage.

6. The company's relevant quality assurance information:

——Copy of original quality book of raw materials

——Re-inspection report of raw materials

——Flaw detection report

——Strength test inspection report

——Sealing test report

——Product certification

——The inspection report required by the customer

12. Related Pictures

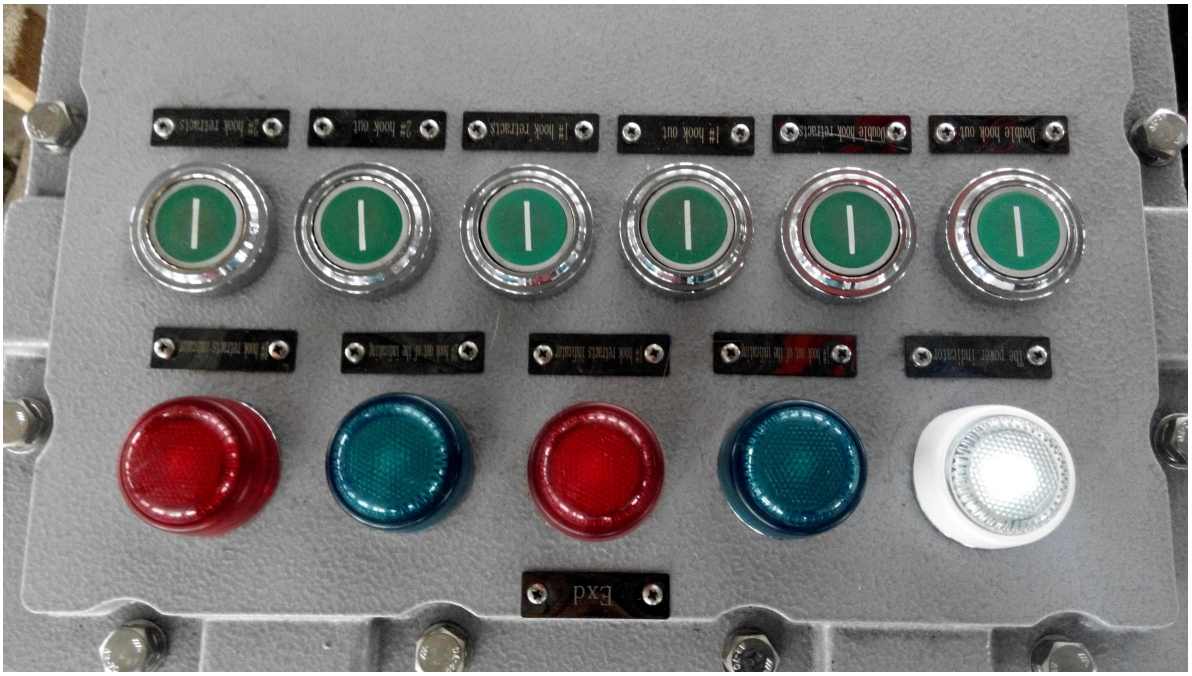

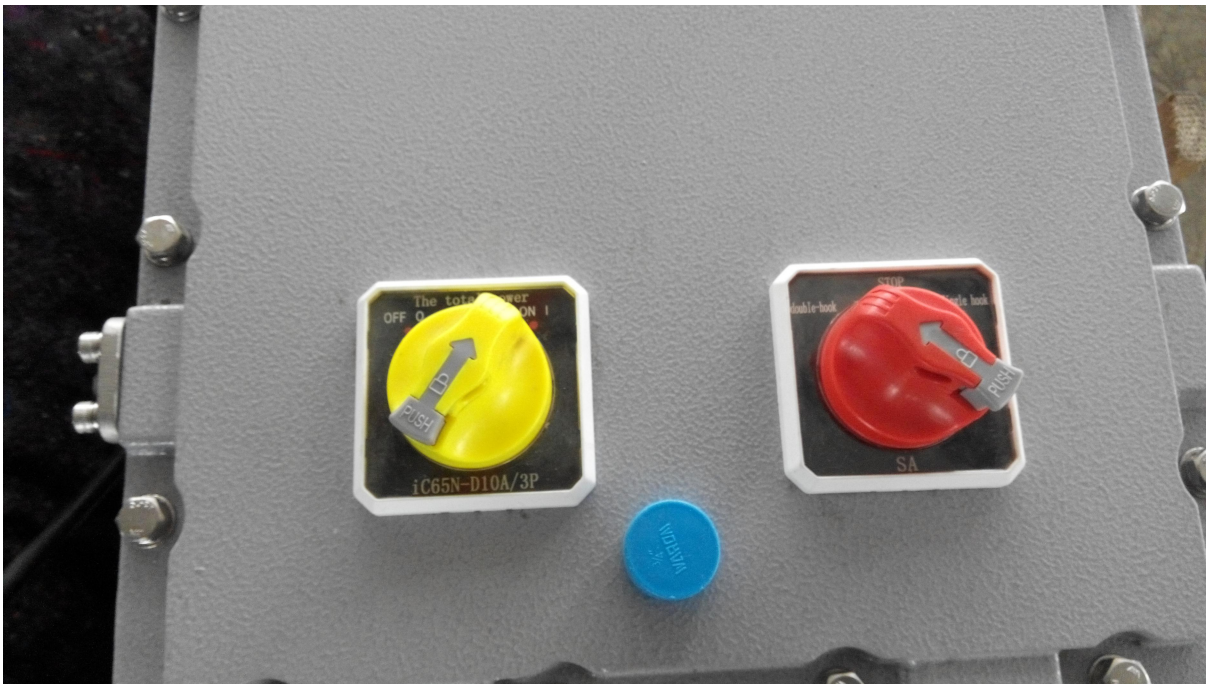


SK


SK

M: 0086-18852550332 Email: sales3@rgecchina.com Website: www.fenderschina.com